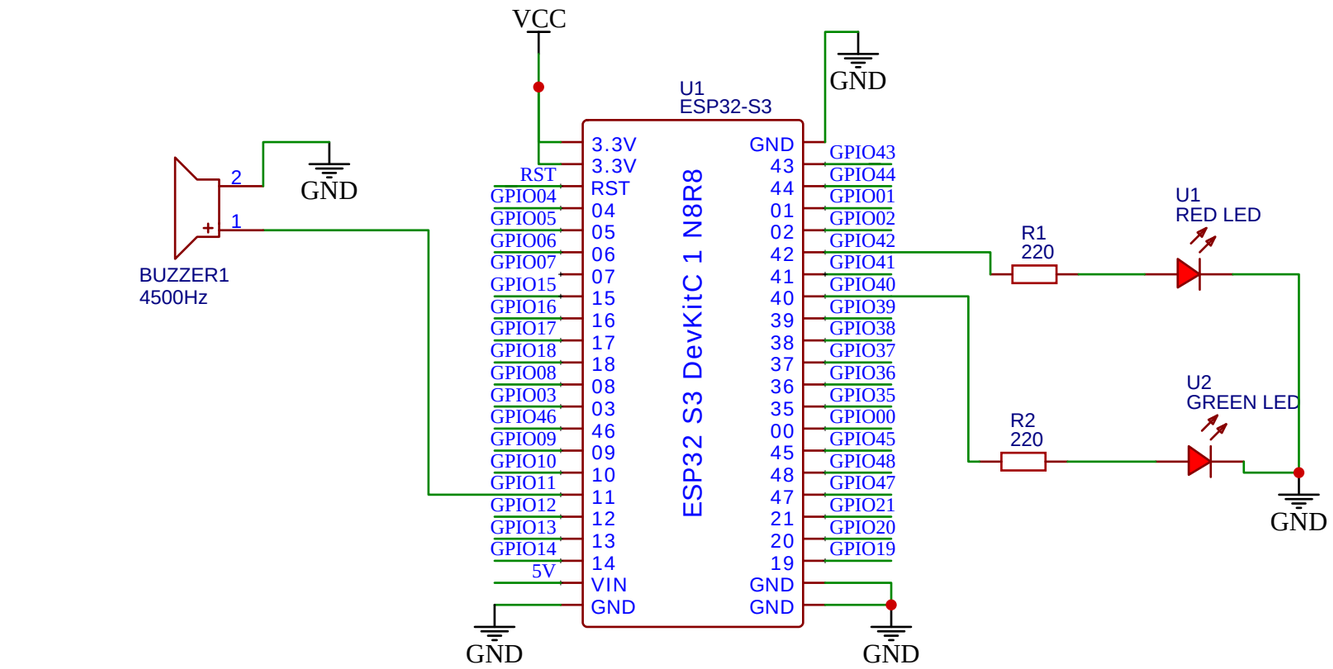

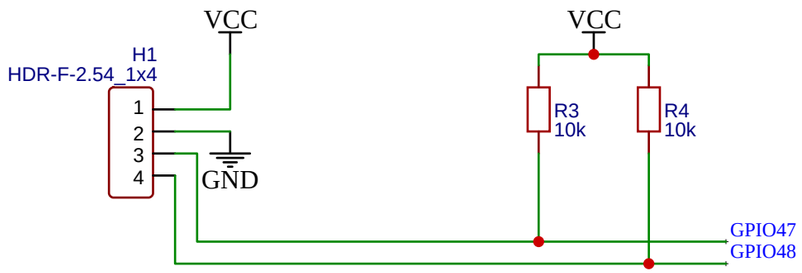

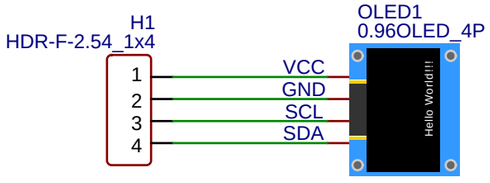

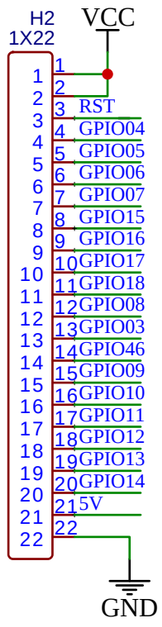

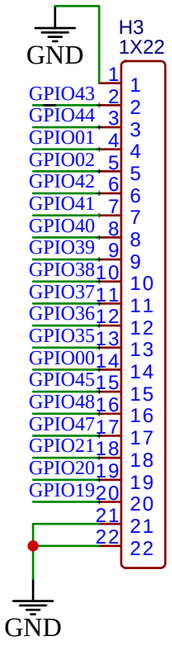

TITLE: BOARD 2 CARIER NODE		REV: 1.0
EasyEDA	Company:	Sheet: 1/2
	Date: 2026-3-12 Drawn By: Axis32 GROUP	